EXPERIMENT 5

CHARACTERISTICS OF BJT

1.1 Objectives

In this experiment, characteristics of BJTs will be investigated. Input and output characteristics of a common emitter connected BJT will be obtained.

1.2 Equipment List

1. DC Power Supply
2. Digital Multimeter
3. Transistor (BC547)
4. Resistors (1 kΩ, 33 kΩ)

1.3 Preliminary Work

1) Identify the terminals of the BJT. Draw a schematic showing the terminals of the BJT and describe how you identified the terminals.
2) From the data sheet note down the values of α, β, Is, and gm.

1.5 Experimental Procedure

1) Build the circuit as shown in Fig. 1.

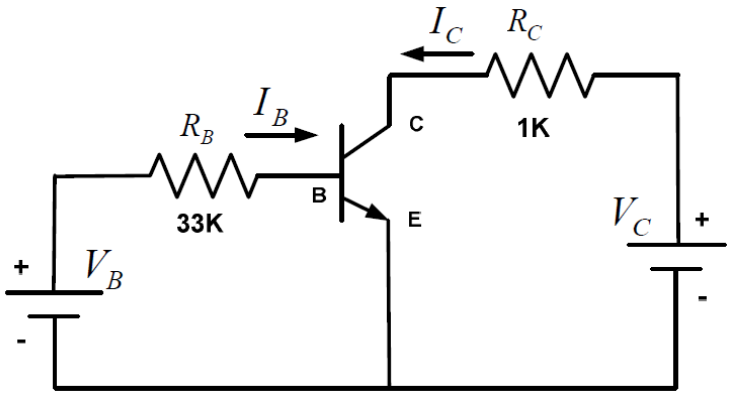

Figure 1

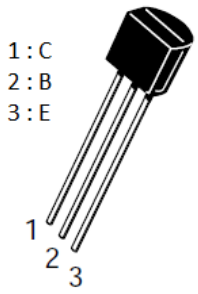

Figure 2. Pin diagram for BC547

2) Vary V_B from 0.5 *V* to 2 *V* in steps of 0.5 *V* and for each V_B value vary V_{CE} according to Table 1. Measure i_C, i_B, V_{CE} and V_{BE} and record these values into table 1.

3) Plot i_C- V_{CE} for different base currents and i_B- i_C graphs on the graph paper using Table 1.

4) Show the forward active and the saturation regions on the same plot.

5) Using the formulas calculate the values of α, β and Is from the data recorded in step 2 and compare them with the data sheet values. Obtain α value as β/(1+ β).

V_B (V)	V_C (V)	i_B (mA)	V_{BE} (V)	i_C (mA)	V_{CE} (V)
0.5	0.2				
0.5	0.5				
0.5	0.8				
0.5	1				
0.5	1.5				
0.5	2				
0.5	3				
0.5	5				
1	0.2				
1	0.5				
1	0.8				
1	1				
1	1.5				
1	2				
1	3				
1	5				
1.5	0.2				
1.5	0.5				
1.5	0.8				
1.5	1				
1.5	1.5				
1.5	2				
1.5	3				
1.5	5				
2	0.2				
2	0.5				
2	0.8				
2	1				
2	1.5				
2	2				
2	3				
2	5				

Table 1